bosco ercol

small sideboard
1384

Thank you for purchasing this bosco small sideboard. Please read the instructions carefully before use to ensure safe and satisfactory operation of this product

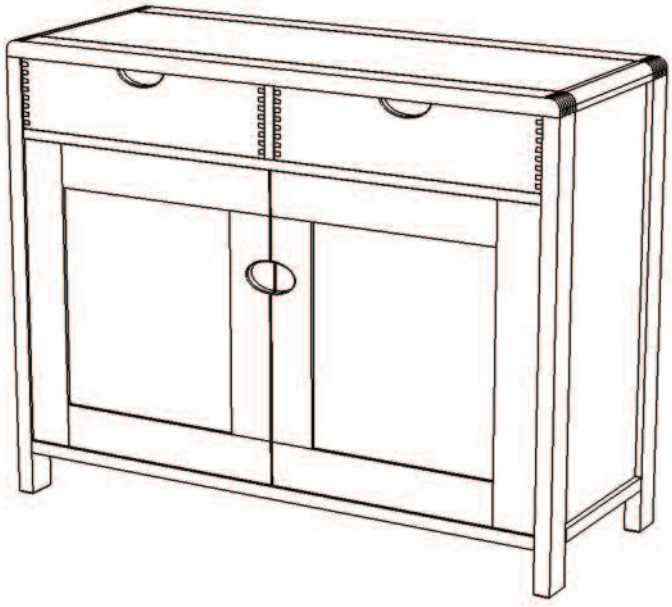

This item is **HEAVY**

Necessary Tools

Pre-assembly preparation

Please ensure instructions are read in full before attempting to assemble this product

Please check the pack contents before attempting to assemble this product. A full checklist of components is given in this leaflet. If any components are missing, please contact the retailer from whom you bought this product.

This product is **HEAVY**, it should be assembled as near as possible to the point of use. **TAKE CARE WHEN LIFTING** to avoid personal injury and (or) damage to the product.

This product takes approximately **20 MINUTES** to assemble with **2 PEOPLE**.

The fittings pack contains **SMALL ITEMS** which should be **KEPT AWAY FROM YOUNG CHILDREN.**

Fittings and parts checklist

A	16mm Screws x 2		C	Brackets x 2	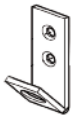
B	Wedges x 2	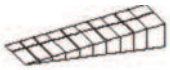	D	Strap x 1	

Wall fixing - if in doubt seek professional advice

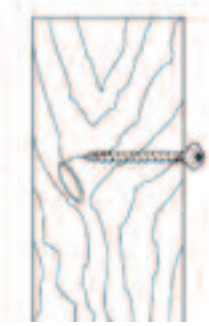

Wood
If fixing to wood make sure that it isn't chipboard as screws can easily pull away from the core structure

Brick or Masonry
Use an appropriate wall plug provided you are sure your wall is sound

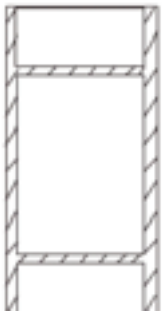

Cavity wall
Special toggle wall plugs are needed. Seek expert advice

1. See fig 1 below. Screw one of the brackets on to the back of the sideboard in the middle, using the short screws provided. Make sure the TOP OF THE BRACKET IS BELOW the top of the sideboard. Position the sideboard against the wall where you want it to go, place the second bracket onto the wall below the one fixed to the sideboard and mark where the holes come on the wall. Move the sideboard away from the wall.

2. Attach the wall bracket **using screws suitable for your type of wall**, see **Wall fixings** above.

3. Place the sideboard back against the wall so the two brackets match up and tie them together with the plastic strap provided Fig 8. The plates need not match exactly, but the plastic tie must go through each plate. Close the strap, but do not over tighten it. See diagrams below.

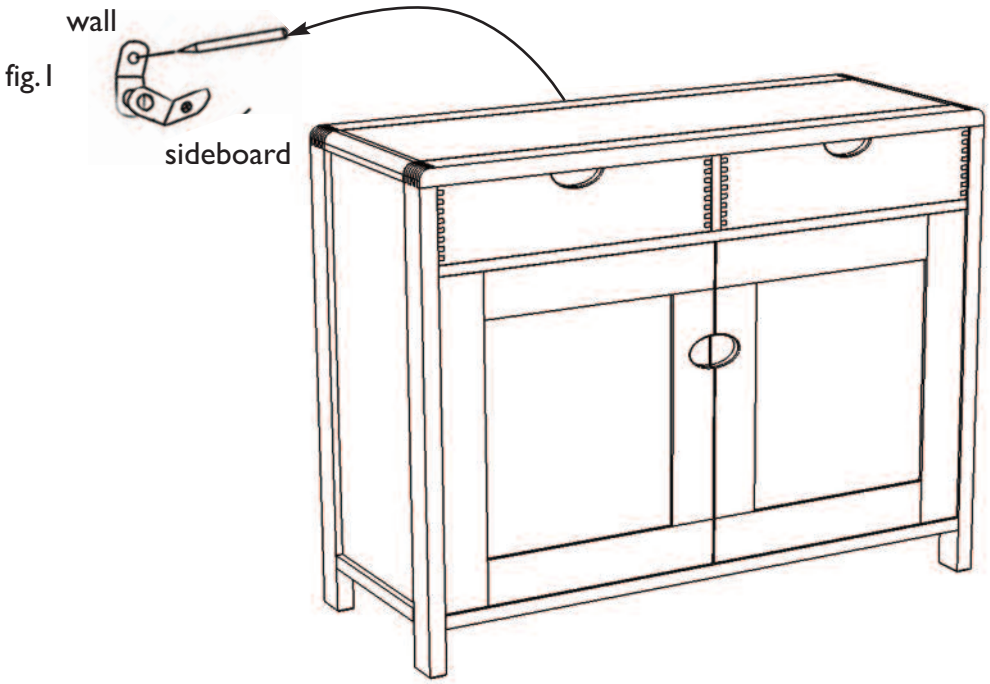

fig.1

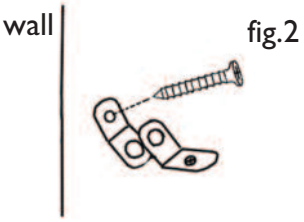

fig.2

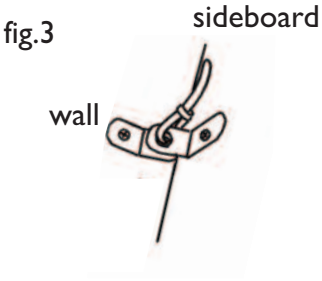

fig.3

4. If the sideboard is not level on your floor use the wedges provided, and snap them off so that they do no Protrude out from the cabinet's legs fig.4, you can also snap them lengthways if desired.

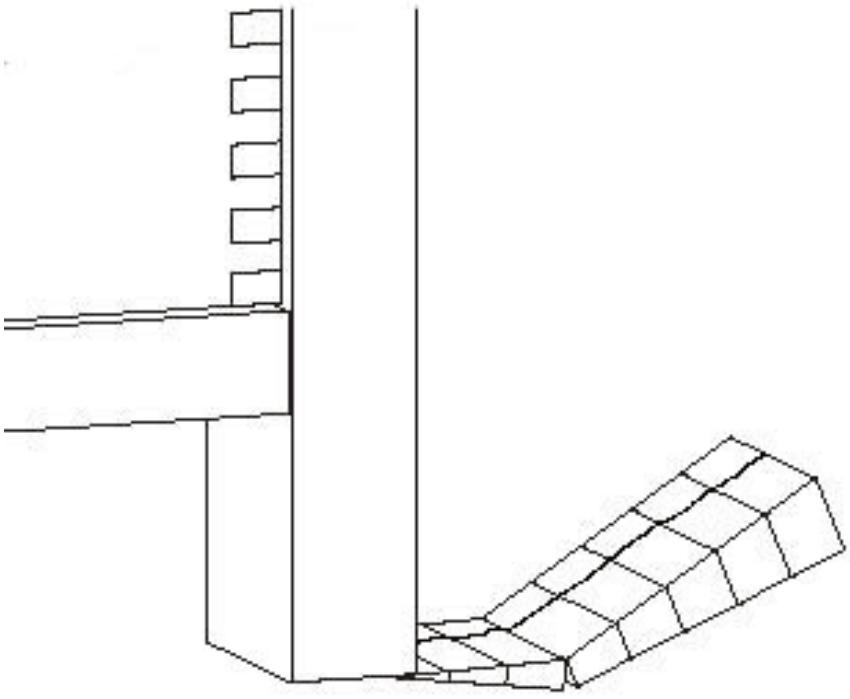

fig.4

Care and maintenence

Wood Furniture

Wood displays different grain patterns depending on which way it is cut - for example, the 'medullary ray' which can appear on oak furniture is a mark of good quality timber - these are just characteristics of the natural beauty of the wood. Some furniture is also deliberately aged and rustic.

All timber surfaces will change colour and mellow over time. New furniture will initially vary in shade from items that have been previously purchased.

How to care for your wood furniture

Furniture with a hard lacquer, wax polish or painted surface should be dusted with a dry cloth.

Spray polishes are best avoided as they contain silicones which may spoil the furniture's surface by building up over time. Wipe up spills immediately. If sticky marks occur on the surface they can be removed with a dilute solution of warm soapy water.

Our furniture will endure most temperatures in the home but it is best to avoid placing furniture next to heat sources such as radiators or fires. Be particularly careful with solid wood as the lack of humidity caused by central heating can cause damage such as warping.

Safety Instructions

Never drag furniture when moving it, always lift it. Please take care when handling or moving the furniture as careless handling may cause damage or injury. No liability will be accepted for damage or injury caused by incorrectly installed furniture.

PLEASE KEEP THESE INSTRUCTIONS FOR FUTURE REFERENCE

Ercol Furniture Ltd, Summerleys Road, Princes Risborough, Buckinghamshire. HP27 9PX **www.ercol.com**