ercol
for John Lewis

ercol Chartridge 4670 Dining Table

stock number 83606001

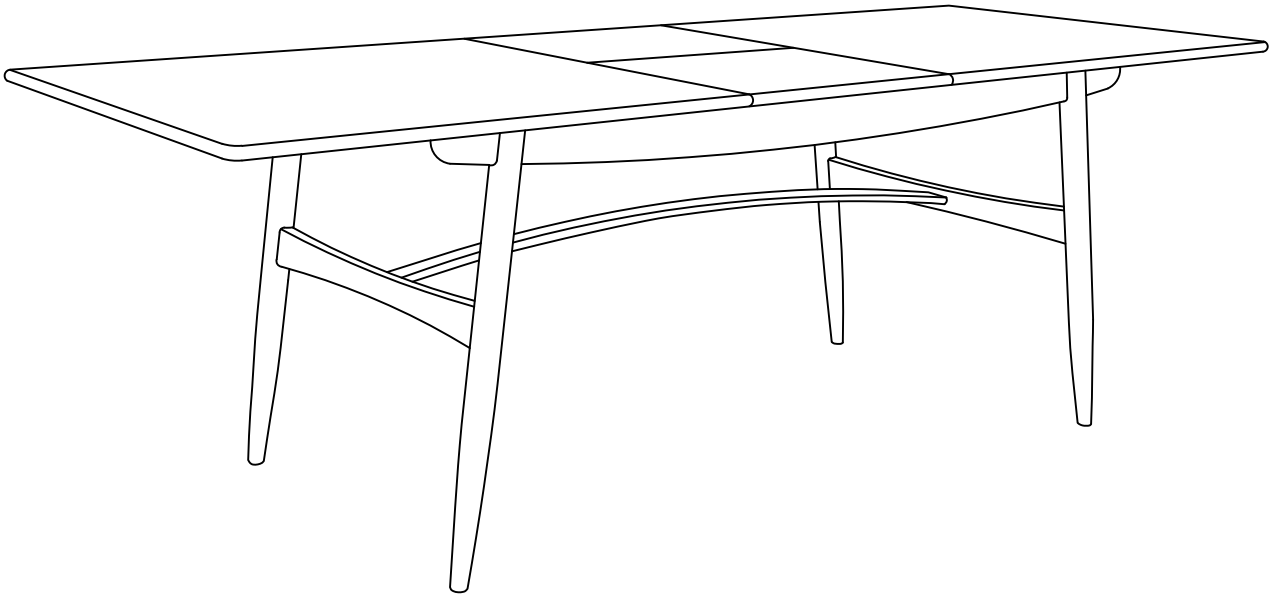

D180/225cm W90cm H75cm

Ref: 00237/4670

Thank you for purchasing the ercol Chartridge dining table . Please read the instructions and warnings carefully before use, to ensure safe and satisfactory operation of this product.
At John Lewis, we are committed to making great products possible.
From our in-house Design Team, to our Buyers, we work together to bring great design to life.
Our expert Product Technologists work collaboratively with our buyers and suppliers to ensure the legality, safety and quality of the product we sell.
We are all committed to designing and developing products to the highest industry standards.
We hope you are happy with your ercol product and welcome any feedback or comments you may have.

The John Lewis Team

Time to assemble
1 Hour
People to assemble

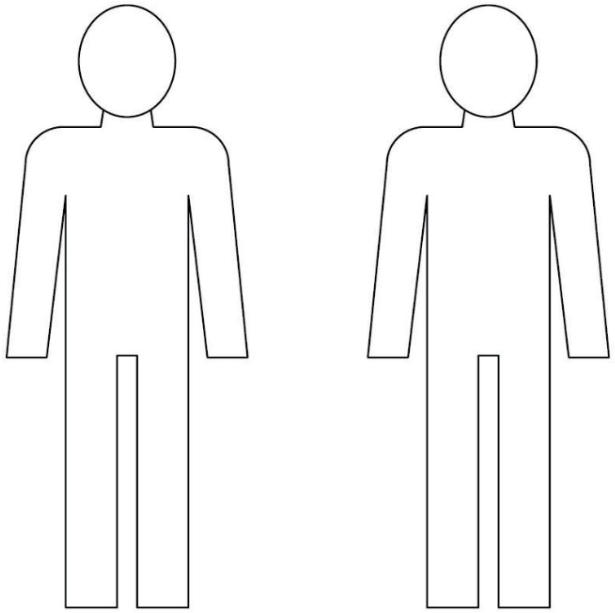

Important safety information

Warnings

⚠ The product should only be used on firm, level ground.
⚠ Keep small parts out of reach of children.
⚠ Ensure the product is fully assembled as illustrated before use.

Do's

✔ Check the pack and make sure you have all the parts listed.
✔ Check all screws or bolts are tightened and inspect regularly.
✔ Make sure the legs remain in contact with the ground at all times.

Don'ts

✘ Do not over tighten screws or bolts.
✘ Do not stand on the product.
✘ Do not use power tools to construct as overtightening and panel failure may occur.

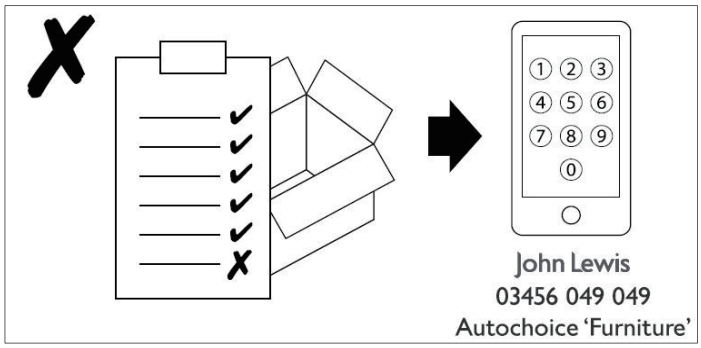

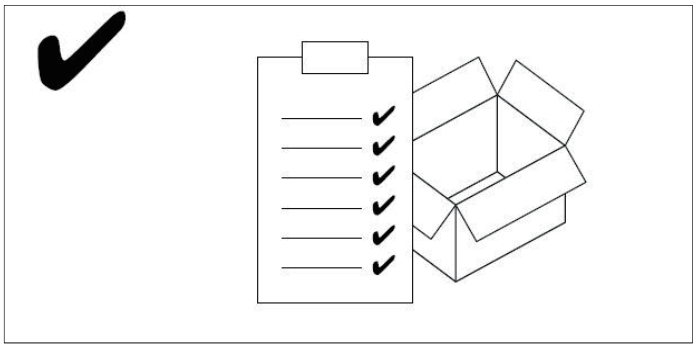

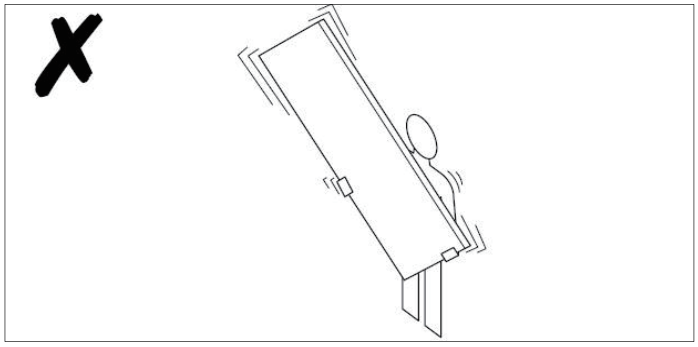

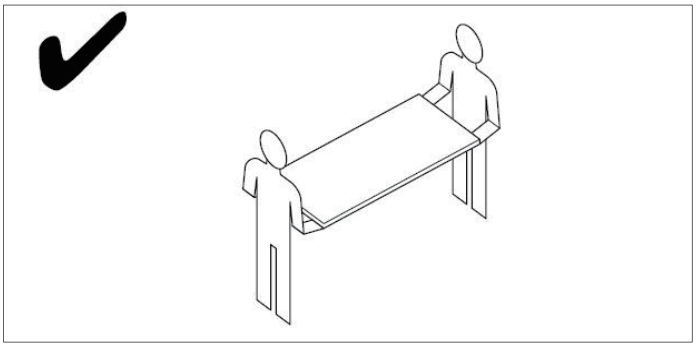

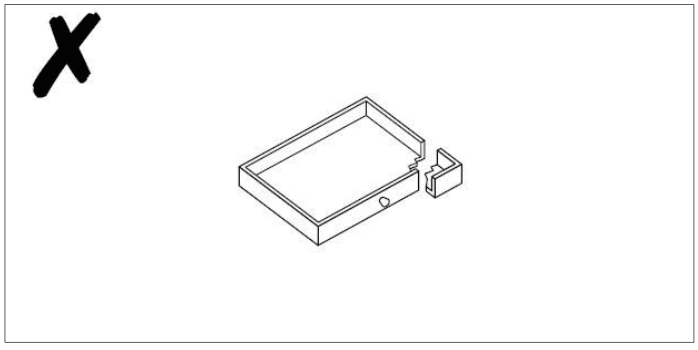

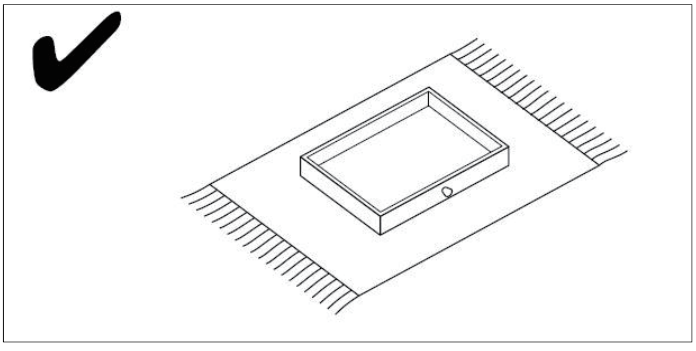

A	Table top x 1	G	8*50 bolt x 12 
B	Table legs x 2	H	bolt washer x 12 
C	Connection blocks x 4	I	bolt washer x 12 
D	Center leg rail x 1	J	6*45 bolt x 6 
E	M4 allen key x 1 	K	half moon washer x 6 
F	M5 allen key x 1 		

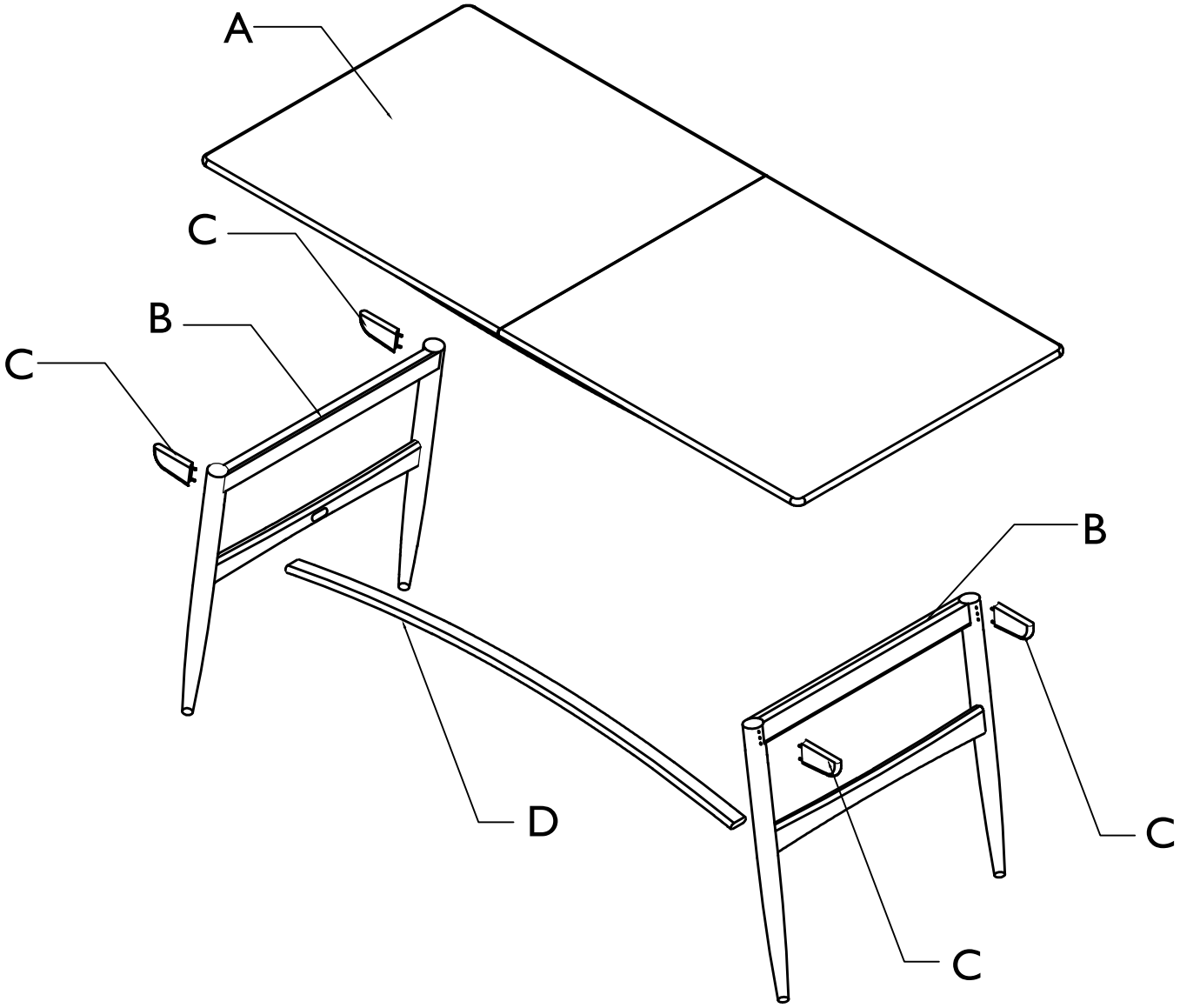

Stock number: 83606001

Ref: 00237/4670

Product Assembly

83606001

Step 1

Parts, fittings and tools

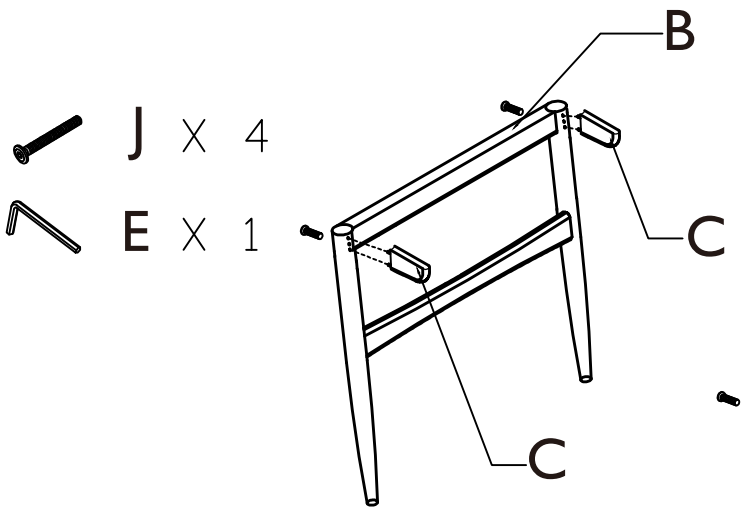

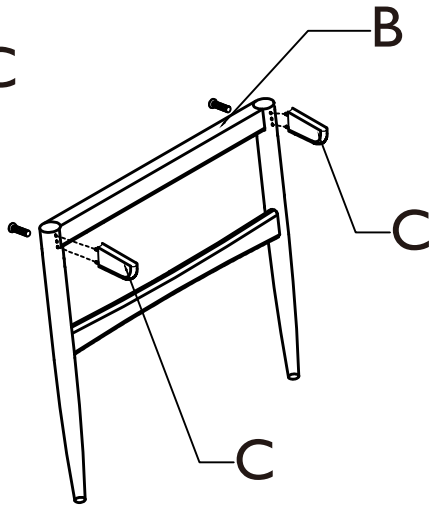

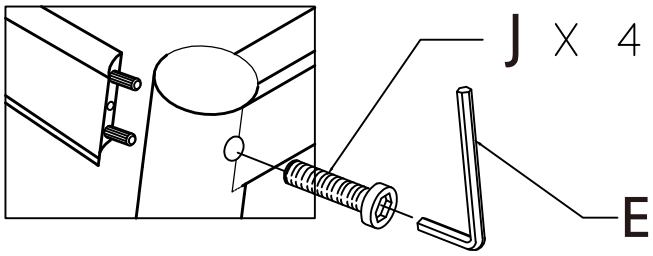

Step 2

Parts, fittings and tools

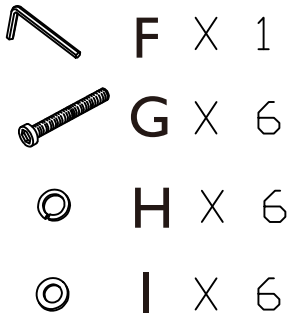

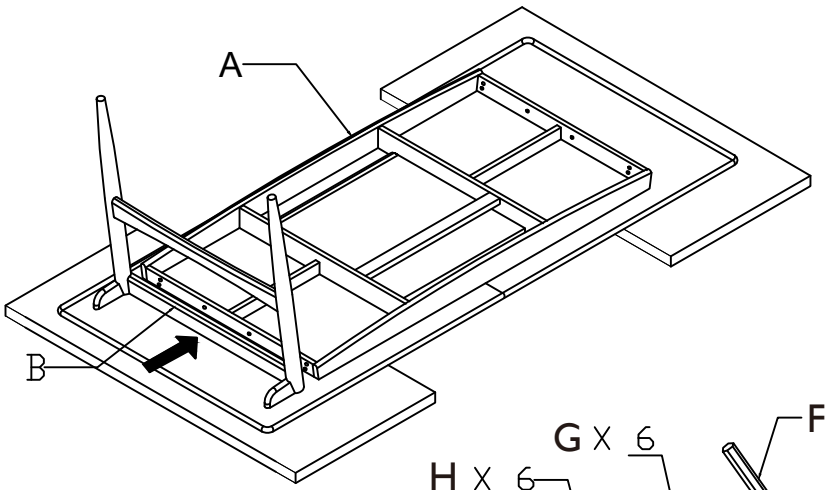

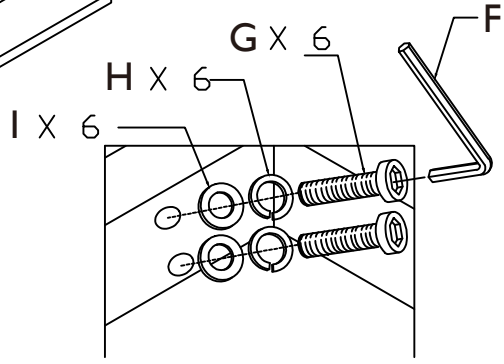

Ref: 00237/4670

Step 3

Parts, fittings and tools

F X 1

G X 6

H X 6

I X 6

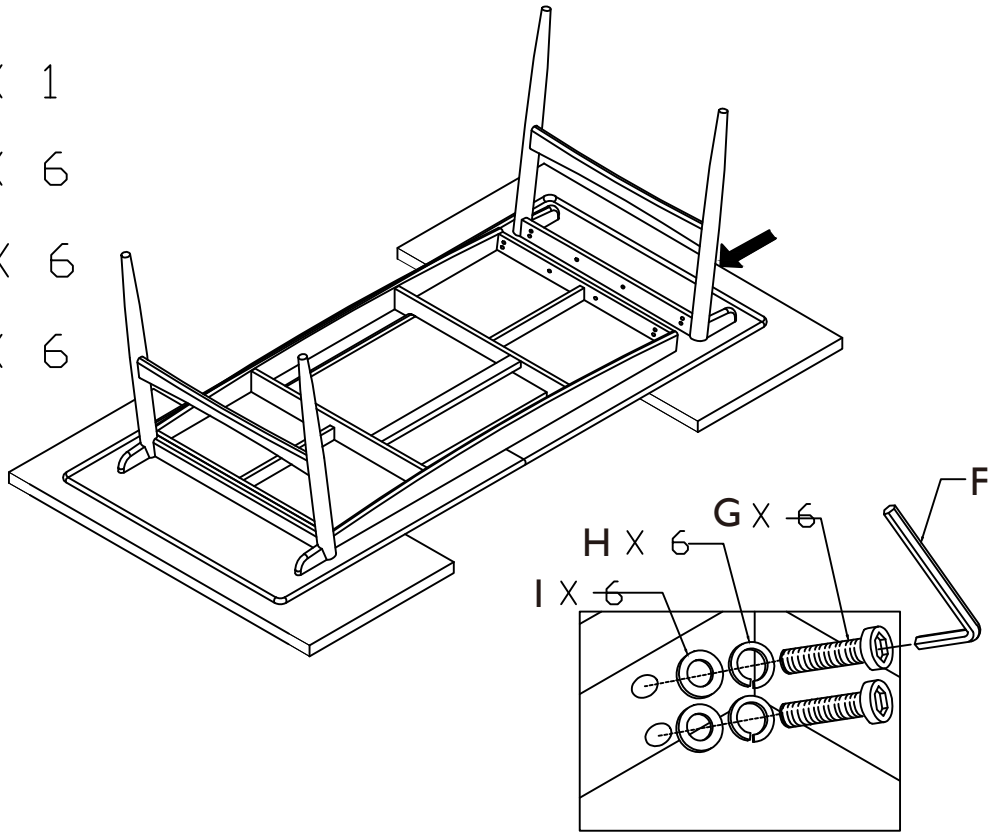

Step 4

Parts, fittings and tools

J X 2

K X 2

E X 1

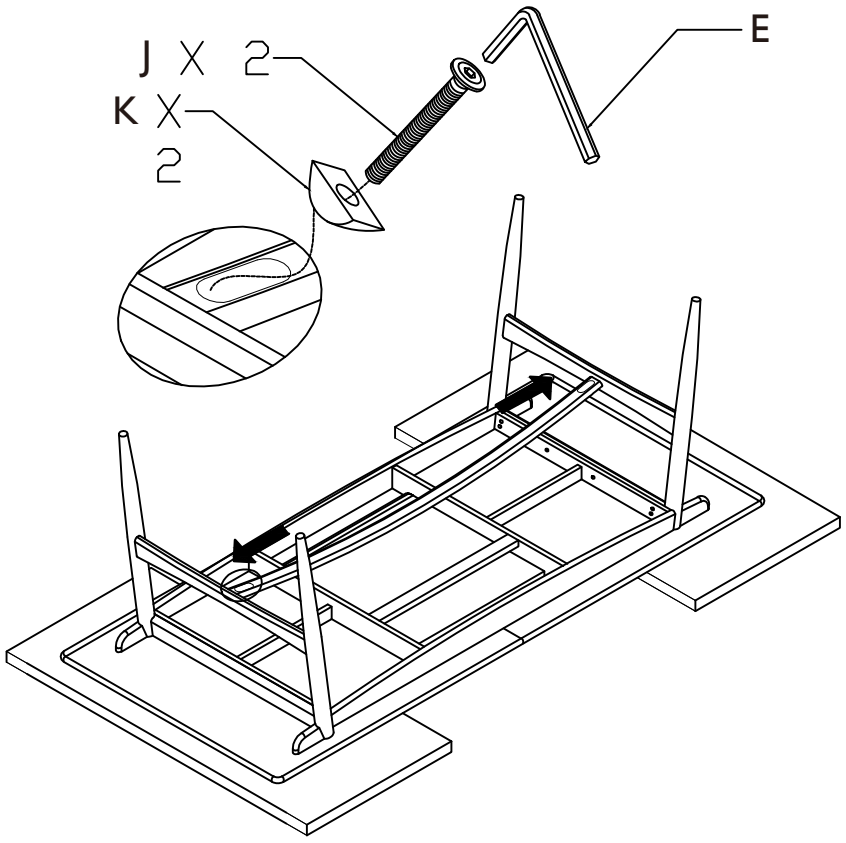

Step 5

Parts, fittings and tools



F X 1

Tighten the bolts please

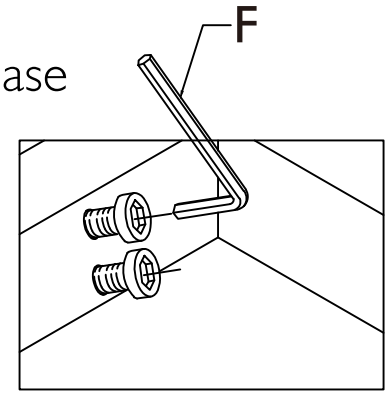

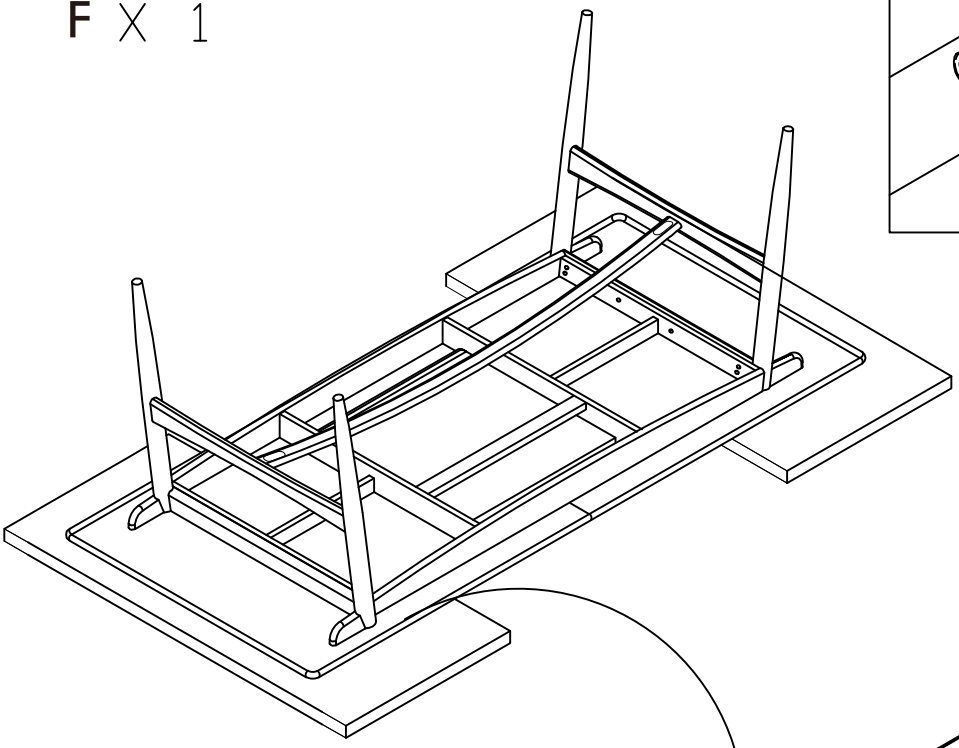

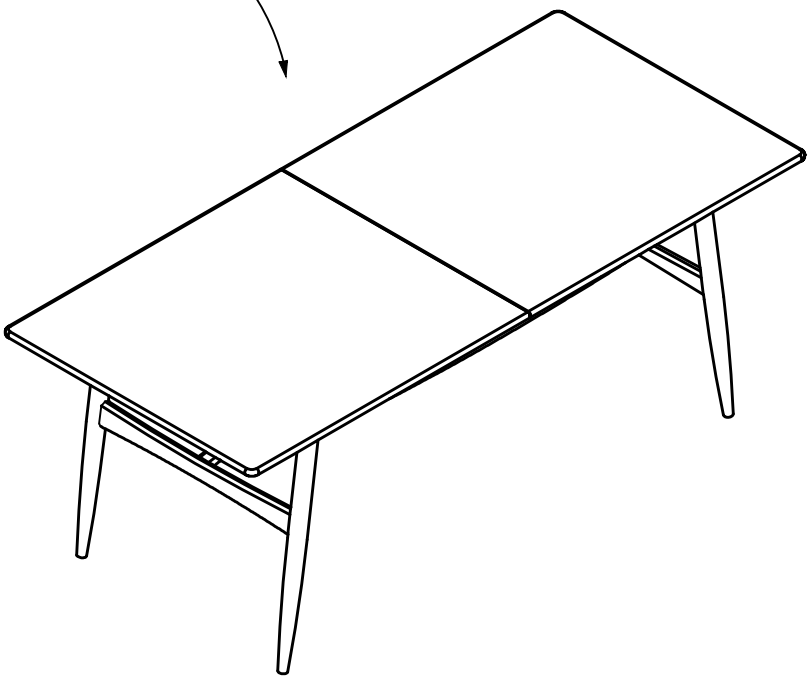

Step 6

Parts, fittings and tools

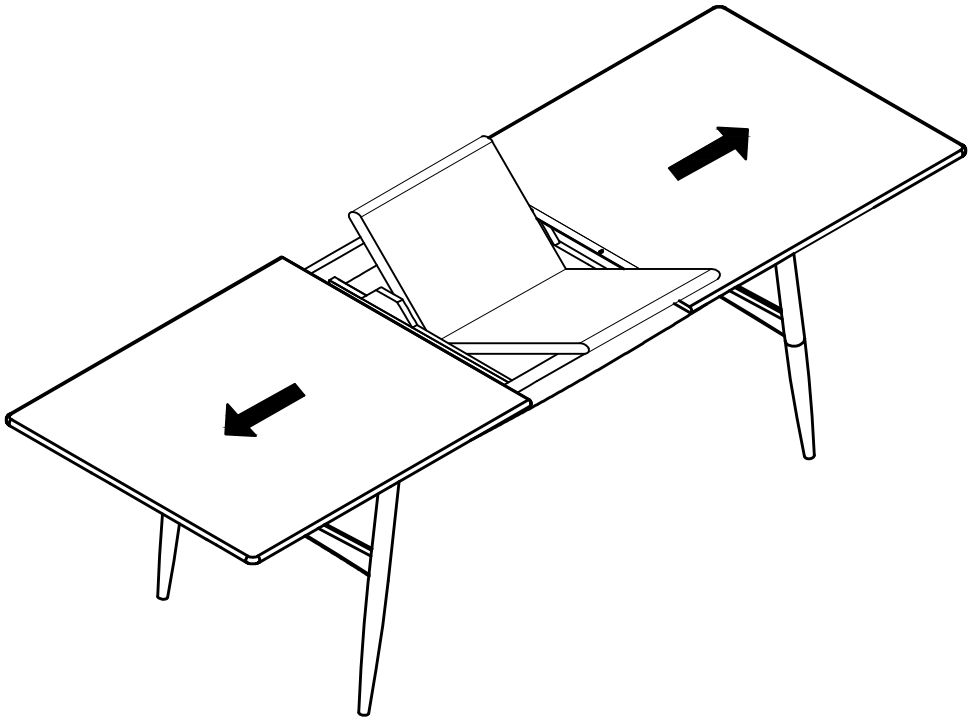

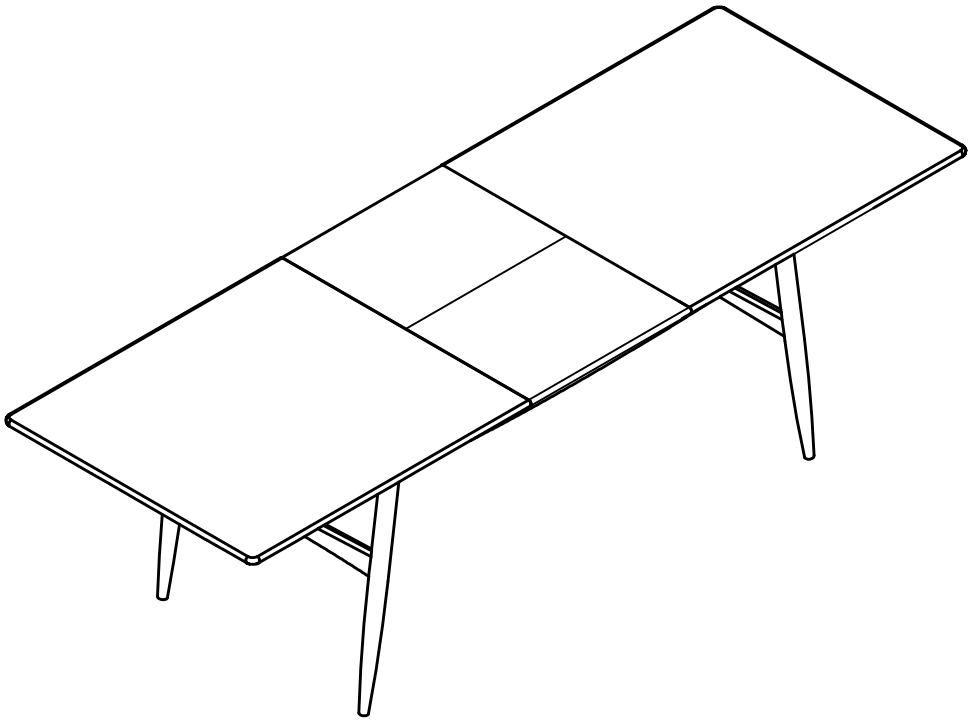

Safety Instructions

General warnings
Never drag furniture when moving it, always lift it. Periodically check all fixings to ensure none have come loose and re-tighten where necessary. Please take care when handling or moving the furniture as careless handling may cause damage or injury. Furniture can be dangerous if incorrectly installed. Assembly should be carried out by a competent person. No liability will be accepted for damage or injury caused by incorrectly installed or assembled furniture.

Specific warnings for heavy items
It is recommended that before moving heavy objects to a new location they are completely dis-assembled to avoid personal injury or damage to the furniture. Please be careful to retain all fittings when doing this. (For fully or partial assemble items).

Safety Instructions
Never drag furniture when moving it, always lift it. Please take care when handling or moving the furniture as careless handling may cause damage or injury. No liability will be accepted for damage or injury caused by incorrectly installed furniture.

Storage units over 600mm
Installation shall be carried out exactly according to the manufacturer's instructions – otherwise a safety risk can occur if incorrectly installed; a warning shall be given to the consumer to notify them of related risks.

WARNING In order to prevent overturning this product must be used with the wall attachment device provided.

Chair specific warnings
Never tilt the chair. Ensure the chair is always placed firmly on the ground. Regularly check leg attachment and retighten screws as necessary. Do not use chair if legs are unstable. Please check fixings and tighten as required.

Stool/Barchair specific warnings
Never tilt the chair. Ensure the chair is always placed firmly on the ground.

Important safety note:
Do Not: Use the stool as a ladder. Climb on the stool. Stand on the foot-rest of the stool, as this could lead to the stool becoming unbalanced and overturning.

Warnings specifically for any product containing glass
If the glass is chipped or broken stop using the product and consult the manufacturer or supplier.

WARNING:

a) Do not place very hot or very cold items directly on glass surafces.

b) Do not sit or stand on glass surfaces.

c) Do not strike the glass with hard or pointed items, or use the glass as a chopping surface.

d) Do not use washing powders or any other substances containing abrasives, as these may scratch the glass.

Additional Requirements for tables
Handle with care! A damaged edge or scratched surface can in rare cases cause the glass to fail unexpectedly into many small pieces. Glass is most vulnerable when struck from the side.

Care Instructions

Wood Furniture

Wood displays different grain patterns depending on which way they are cut - for example, the 'medullary ray' which can appear on oak furniture is a mark of good quality timber - these are just characteristics of the natural beauty of the wood. Some furniture is also deliberately aged and rustic.

Wood veneers also allow distinctive patterns to be created on flat surfaces, such as table tops and drawer fronts by the way the slivers are arranged.

All timber surfaces will change colour and mellow over time. New furniture will initially vary in shade from items that have been previously purchased.

How to care for your wood furniture

Furniture with a hard lacquer, wax polish or painted surface should be dusted with a dry cloth.

Waxed furniture will need to be given a coat of beeswax a couple of times a year to help maintain its lustre.

Spray polishes are best avoided as they contain silicones which may spoil the furniture's surface by building up over time.

Make sure all surfaces are protected from heat and liquids by mats and coasters. Wipe up spills immediately and ensure that a mat or pad is placed under paper if you are writing.

Extendable dining tables should be left extended for the first few months to avoid an uneven appearance. Likewise, lamps and ornaments should also be moved regularly.

Our furniture will endure most temperatures in the home but it is best to avoid placing furniture next to heat sources such as radiators or fires. Be particularly careful with solid wood as the lack of humidity caused by central heating can cause damage such as warping

Glass and acrylic furniture

Use glass cleaner or soapy water for cleaning, do not use anything abrasive as this may damage the surface of the product.

Protect surfaces from scratches and marks by using mats and coasters.

Metal and leather

Protect leather from spillage, sunlight and heat. A slightly damp cloth is the best cleaning agent for both materials.

Do not use any abrasive cleaner or harsh detergent as this can damage the surface. Care for the leather with leather conditioner. We recommend applying leather conditioner before using the furniture for the first time.

Avoid spilling or dropping crumbs of food with a high fat content on the surface as this can permanently mark the leather.

Your feedback is very important to us and we would love to hear your comments on your new furniture. Please visit our website to leave a review. Thank you.

PLEASE KEEP THESE INSTRUCTIONS FOR FUTURE REFERENCE

John Lewis Partnership
1 Drummond Gate
Pimlico
London
SW1V 2QQ
johnlewis.com

Ref: 00237/4670